Electrolux PROFESSIONAL

Standard Preparation Sink for Dishwasher with 2 Bowls & Right Drain

ITEM #

MODEL #

NAME #

SIS #

AIA #

133197 (NDBD1817R)	Sink Unit for Undercounter Dishwasher with 2 bowls 500x500mm and right hand drainer, 1800mm

Short Form Specification

Item No.

Entirely made from stainless steel. The 50mm high worktop in 304 AISI stainless steel, 1mm in thickness, has an overflow rim and welded corners. Integral rear upstand, h=100mm, with 8mm radius. All-round apron (except where the dishwasher is placed). Lower shelf placed under the bowls. Square section legs 40x40mm on 1" height-adjustable feet (+/-20mm)
N. 2 bowls mm500x500x300h with overflow pipe and 2" drain hole; drainer (on the right hand side) with void under space to lodge an undercounter dishwasher.

APPROVAL:

Main Features

- Sturdiness, stability and reliability of table accurately tested.

Construction

- Sink tops easily slotted onto the legs and taps are easily installed from the rear.
- Square section legs and 40 mm height-adjustable feet in 304 AISI stainless steel.
- 100 mm upstand with 8 mm radioused corner and 13 mm deep, designed to be used against a wall.
- 50 mm worktop in 304 AISI stainless steel, 10/10 in thickness with overflow rim along the top.
- 40 mm-thick lower shelf slots easily into place at a height of 200 mm from the floor. solid shelves supplied as standard, perforated shelves supplied on request.
- Bottom part of drain left free to house an undercounter dishwasher.
- Wide range of taps are available to suit every need.
- Drainage area suitable for drying operations
- 100 mm upstand with 10 mm radioused corner and 13 mm deep, designed to be used against a wall.

Optional Accessories

- Lower shelf for 1200mm tables and sinks and for 1800 mm undercounter dishwasher sinks — PNC 855145 ❑
- 3-sided underframe for 1200mm tables — PNC 855152 ❑
- Wheel kit for cupboards, 4 wheels (2 with brakes), D=100 mm — PNC 855299 ❑
- Maxi reel retractable hose spray unit, 10m — PNC 855320 ❑
- Maxi reel retractable hose spray unit, 15m — PNC 855321 ❑
- Elbow operated mixer tap with spout 3/4", single hole — PNC 855322 ❑
- Elbow operated mixer tap with short spout 3/4", single hole — PNC 855323 ❑
- Maxi reel rectractable hose spray unit, 6m — PNC 855327 ❑
- Foot operated mixer tap (hot and cold) with spout 3/4'' — PNC 855328 ❑
- False bottom for right and left hand 500x500 mm bowl — PNC 895200 ❑
- Single plastic drain syphon 2" for Sinks — PNC 895313 ❑

Standard Preparation Sink for Dishwasher with 2 Bowls & Right Drain

Front

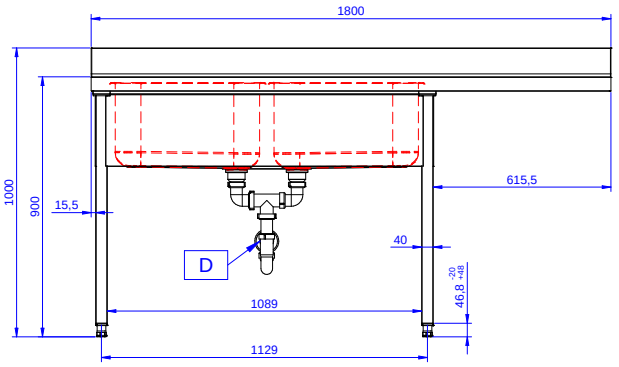

Side

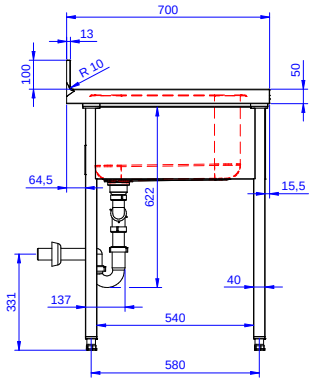

D = Drain

Top

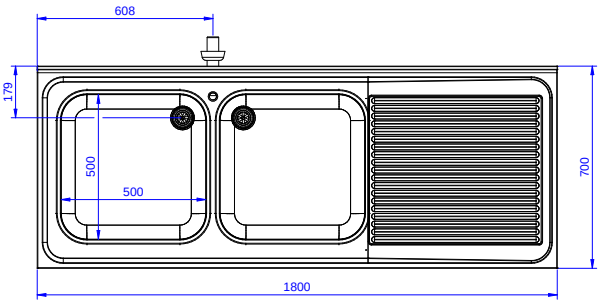

Key Information:

External dimensions, Width:	
133197 (NDBD1817R)	1800 mm
External dimensions, Depth:	700 mm
External dimensions, Height:	1000 mm
Upstand Dimensions, Height:	100 mm
Upstand Dimensions, Depth:	13 mm
Upstand Dimensions, Radius:	R=16
Bowls number	2
Bowl dimensions	500x500xH250
Worktop thickness:	50 mm
Net weight:	62 kg

The company reserves the right to make modifications to the products without prior notice. All information correct at time of printing.